Guide To Grease Interceptors

Eliminating the Mystery

- Design & Operation
- Standards
  - *PDI-G101*
  - *A112.14.3 (in preparation)*
  - *A112.14.4 (in preparation)*
- Sizing & Placement
- Maintenance
- New Technology
- Large Outside Interceptors
- Codes & Regulations
- Waste Water Treatment

THE PLUMBING AND DRAINAGE INSTITUTE

45 Bristol Drive · South Easton, MA 02375

Phone: (800) 589-8956
Fax: (508) 230-3529
Web: www.pdionline.org
E-mail: info@pdionline.org

Plumbing and Drainage Institute 4/98 15d LIQUID WASTE EQUIPMENT

© 1998 The Plumbing And Drainage Institute

Acknowledgments

The Plumbing & Drainage Institute wishes to thank its member companies, named below, for their support and assistance in producing this very much needed ***Guide To Grease Interceptors***:

- **Josam Company**
- **Jay R. Smith Mfg. Co.**
- **Wade Division - Tyler Pipe**
- **Watts Regulator Company**
- **Zurn Industries, Inc.**

We particularly wish to thank Jon Wehrenberg whose work entitled ***Understanding Grease Separation and Recovery*** formed the basis for our Guide and who wrote the initial draft. Thanks to George Flegel for his efforts in the areas of technical accuracy and proof-reading which are much appreciated. Many thanks to Cathy Ackil who produced the outstanding illustrations, and to Jerry McDanal, who contributed much effort to revising and fine-tuning the text. Finally, thanks to Billy Smith, Jim Hadley and Al Becker for checking the finished work.

Plumbing & Drainage Institute
South Easton, Massachusetts
William C. Whitehead
June 15, 1998

GREASE INTERCEPTORS: ELIMINATING THE MYSTERY

In the late 1800's Nathanial Whiting of California patented the passive gravity separator, a device known as a grease trap. That device remains relatively unchanged today as a means of separating fats, oils and greases from wastewater. Despite the fact that the technology works well and is little changed from its original design, grease is a problem in almost every locale in the country.

When grease enters the waste stream it creates a variety of problems and once fats, oils and greases have entered the waste stream they are rarely suitable for recycling because of contamination from metals, chemicals and pathogens. Further, disposal must be in accordance with local and federal requirements. The acronym "FOG" is utilized in most contemporary references to fats, oils and greases because with the increased use of vegetable oils and fat substitutes, greases now consist of more than various configurations of fats.

The first problem is not one which affects the waste water system, it is the loss of a potentially valuable resource. When recycled before being in a drain, FOG can be used in a variety of products such as soaps and cosmetics, fertilizer, lamp oil, animal feeds and munitions. Aside from the loss of a valuable commodity, when FOG enters the waste water stream there is a large and unnecessary economic loss due to additional problems. Grease can block pipes, can form aggregates which in turn can also cause blockages, and grease encapsulated solids can increase the time and cost of treating the wastes at waste water treatment plants.

The problems are not limited to any specific size wastewater collection system or treatment facility. Private systems such as septic systems will fail and require costly repair or replacement just as will large systems which might be found in cities such as Chicago, Phoenix, New York or Miami. Grease has been known to cause blockages due to occlusion in pipes many feet in diameter, and in the city of Chicago (as an example) millions of dollars have already been spent replacing large sewers whose internal diameters can now be measured in inches due to solidified grease.

All of the problems are unnecessary because separating grease from waste water is easily accomplished. Grease interceptors or traps function using gravity and coalescence as a means of separation. Greases, fats and oils are about 89 or 90% of the weight of water. To separate them from water an interceptor provides a separation chamber which allows FOG to rise to the surface. FOG free water then exits from the separation chamber at the low point farthest from the inlet end.

To simplify the influences which affect separation one could say there are only three major factors which must be considered. They are the design of the interceptor, the installation of the interceptor, and the maintenance of the interceptor.

INTERCEPTOR DESIGN

Because of the scope of problems relating to FOG, there are a large number of product designs and offerings. Due to this fact it would seem difficult for one to choose an interceptor which would function as designed. Fortunately that is not the case. *See Figures 1 and 2.*

In the early 1940's the United States government through the Army Corps of Engineers, the Quartermaster General, the Surgeon General, and the Research Committee of the Plumbing and Drainage Manufacturer's Association (now the Plumbing and Drainage Institute), and others held a series of conferences to develop a testing program to establish a means of rating flows and capacities for grease interceptors manufactured at that time.

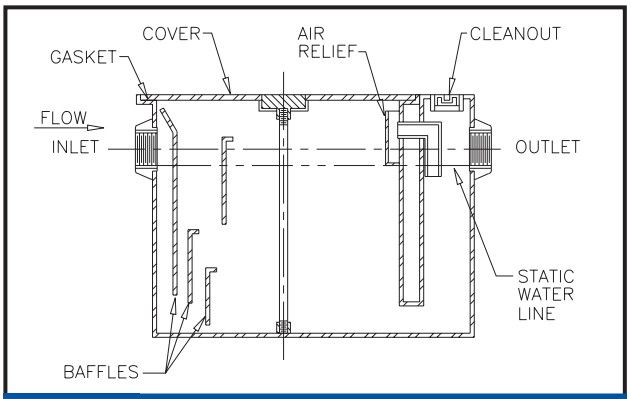

Figure 1: Typical Grease Interceptor

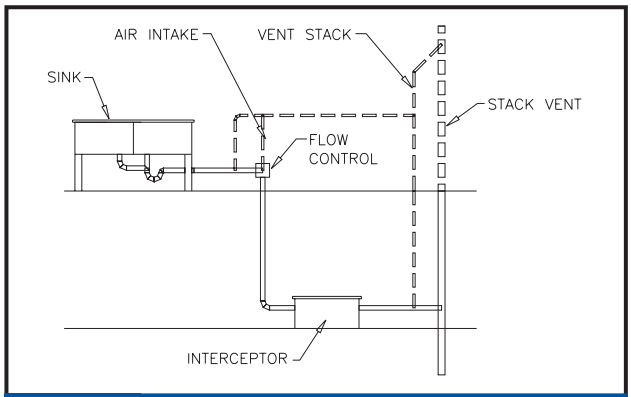

Figure 2: Grease interceptor serving trapped and vented sink on floor above - flow control air intake intersects vent

From the efforts of the involved parties, and as a result of exhaustive laboratory testing by the Iowa Institute of Hydraulic Research at the State University a standard now known as PDI-G101 was developed. Since the first issue of the PDI standard in 1949 it has been widely recognized, and it is included as the basic testing and rating requirement of Military Specification MIL-T-18361, and most recently has become the basis for the yet to be released ASME Standard A112.14.3 which covers Grease Interceptors.

As a result of the existence of PDI-G101 a product which is designed to that standard and is certified as having met that standard can be installed with the confidence that it will be an efficient separator at flow rates up to and including its rated flow and up to and including it's rated capacity for retained FOG.

The products which are certified to PDI-G101 are interceptors up to 50 GPM (soon to be added are 75 and 100 GPM interceptors) which are typically installed at the fixture or the point of use. ***Since a PDI certified interceptor is small, relatively speaking, it accomplishes its separation efficiency by means of specially engineered internal baffling arrangements used in conjunction with an external***

vented flow control device. Using the principles of fluid mechanics, a PDI certified interceptor takes advantage of air entrained in the effluent by the vented flow control device to accelerate separation. *See Figure 3.*

FOG laden waste water passes through a vented flow control device on its way into a PDI certified interceptor. The flow control device has an internal orifice which limits the flow into the interceptor to the interceptor's rated capacity. As the effluent passes through the orifice, which is sized to compensate for the amount of head in the waste water collection system, air is introduced through the vent (which is actually an air intake). The entrained air remains with the effluent until it enters the grease interceptor.

Upon entering the grease interceptor, the effluent is directed through the separation chamber of the interceptor by means of a system of baffles. The baffles serve to lengthen the flow path of the effluent to increase the time of separation while providing a non-turbulent environment for separation to take place. The entrained air will separate from the effluent quickly. As it does so, it accomplishes two things; First, the escaping air accelerates the separation of FOG as it rises rapidly to the surface of the water in the separation chamber. The rising air bubbles literally pull the FOG globules to the top of the water. Second, the air released then provides a small amount of positive pressure above the contents of the separation chamber to regulate the internal running water level of the grease interceptor.

Most manufacturers provide methods to regulate internal air pressure to prevent the contents of the separation chamber from being forced downward thus reducing the interceptor's capacity and efficiency. *See Figure 4.* Furthermore, Most codes contain language requiring a means of preventing the interceptor from becoming air bound. Typically, that language will state: "Venting. Interceptors and separators shall be so designed that they will not become air bound when airtight covers are used".

For the specifier or purchaser of a grease interceptor to be assured the product will perform as intended it is only necessary to verify the product has been certified to a known standard such as PDI-G101.

No discussion of the design of grease interceptors would be complete without covering large capacity interceptors which are

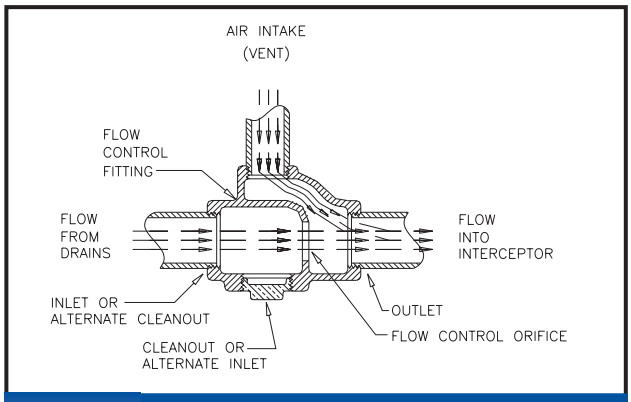

Figure 3: External vented flow control device with air and water flow shown. Actual configuration may vary from design shown.

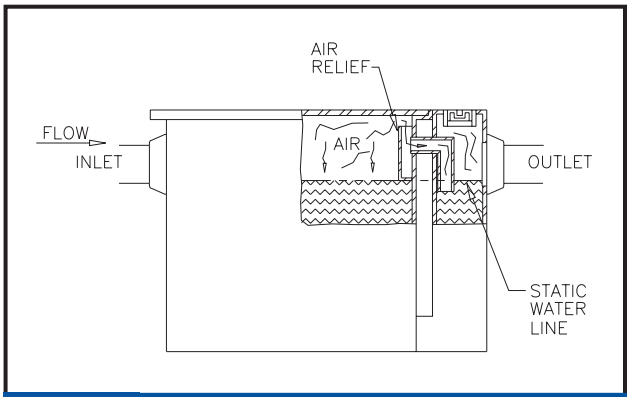

Figure 4: Internal air relief detail

typically located outdoors. In certain areas of the country existing codes will allow or even require an interceptor whose sole specification is size. Unfortunately, even today, more than 100 years since Nathanial Whiting patented the grease interceptor there exists no standard for or base of accumulated data on large capacity interceptors. There is a high expectation that large capacity interceptors will work, but there is no consensus standard or test data to stipulate or verify their performance. *See Figures 5a and 5b.*

Since remotely located outdoor interceptors must deal with conditions different from point of use interceptors the design requirements will vary. One must first define the required retention time based upon the maximum anticipated rate of flow. This varies from city to city or region to region so it must be left up to the appropriate administrative authority to establish this requirement through testing based upon installation conditions. These requirements currently vary from simple statements (in local codes) of minimum capacity size (such as 750 gallons) to retention times based upon flow rates (such as 30 minutes) to formulas which make assumptions about the amount of water used per meal served. The lack of uniformity in sizing requirements for remotely installed interceptors is indicative of the lack of consensus about their performance.

There is an attempt underway to develop a consensus standard for remotely located grease interceptors, but unlike the PDI-G101 or ASME A112.14.3 which have a well documented basis from years of testing, the drafters of that new standard must literally start at the beginning.

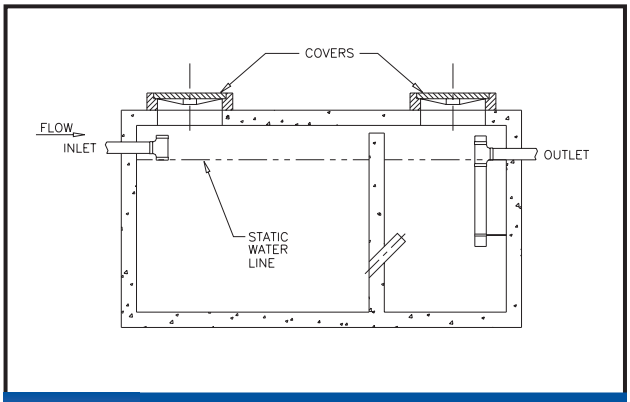

Figure 5a: A large capacity, in-ground type grease interceptor, typically concrete

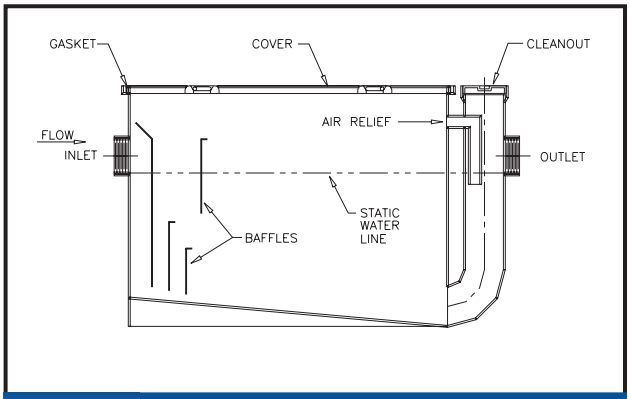

Figure 5b: A large capacity, in-door or in-ground type grease interceptor, typically steel

INSTALLATION

A properly sized and designed grease interceptor may not work or may work less efficiently if it is installed incorrectly. As basic as it seems, the interceptor must not be installed backwards. This is mentioned since far too many interceptors which are condemned for not working have merely been installed backwards. The problems relating to installation, however, go beyond the obvious. Regardless of whether the interceptor is a certified interceptor or a large capacity interceptor, one of the most important installation practices to follow must be to locate the interceptor as near as possible to the source of the FOG laden water. *See Figures 6 and 7.* As stated previously, this is important because every foot of piping between the source of FOG laden waste water and the interceptor is unprotected and is a potential maintenance problem.

A second reason for locating the interceptor near the fixture: FOG separates best when the effluent is relatively hot.

While the laws of physics dictate that FOG separates from water at a slower rate as temperatures increase, in these applications the separation rates at room temperature and at elevated temperatures (testing has been done up to 200 degrees F°) are so close that the other benefits outweigh the slight improvement in separation rate. For example, in waste water, particularly the FOG laden waste water from commercial kitchens, it is likely there will be solids present. These solids and the FOG are more likely to form a globule, the specific gravity of which exceeds that of FOG alone. As the effluent temperature rises however, the FOG will be more likely to separate freely from those solids.

Keeping the FOG from coalescing on the solids is important because the resultant

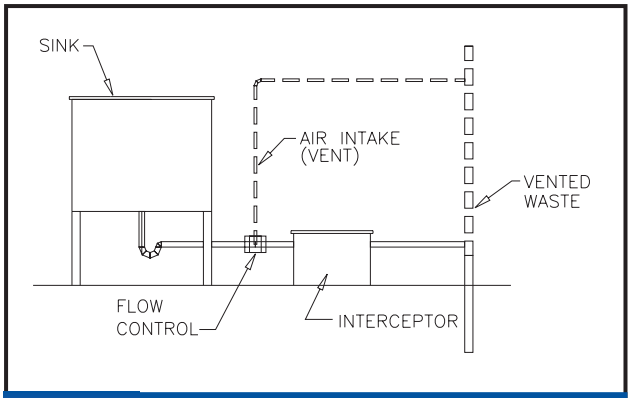

Figure 6: Grease interceptor serving sink - flow control air intake intersects vent

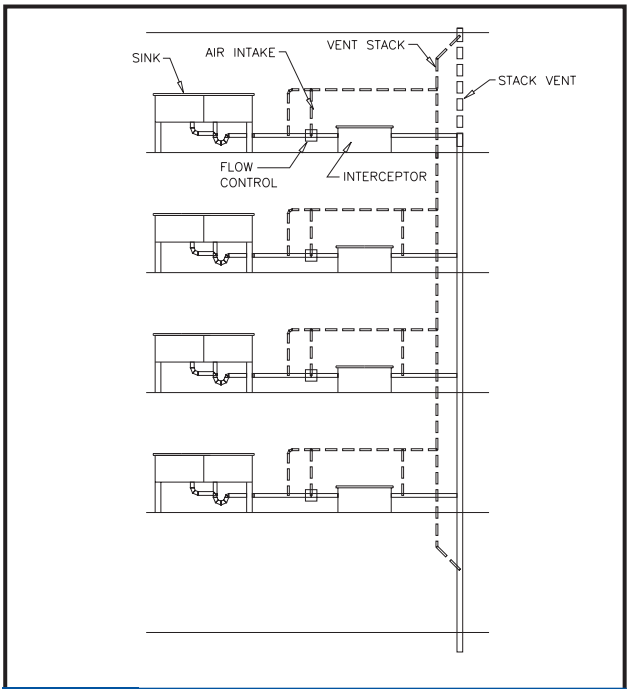

Figure 7: Grease interceptors serving trapped and vented sinks in a multi-story installation - flow control air intakes intersect vent

material may sink, and ultimately be discharged from the interceptor. If on the other hand, the FOG is free to separate from the solids in the waste water due to the higher temperatures, which tend to make the FOG less viscous, the FOG is more likely to be retained in the interceptor.

FOG laden solids passing through the interceptor create two problems. First, they tend to form balls or aggregates (grease can become very hard) posing a blockage problem in the waste water collection system. Second, if these materials do make it to the waste water treatment plant without creating any blockages, they can make waste water treatment much more difficult since degradation of FOG consumes oxygen necessary for the digestion of the waste in the treatment plant and because FOG decomposition is quite slow, it can pass through the plant. This increases the effort required to treat wastes and can cause violations of the plant's discharge permit.

Unfortunately many of the codes in existence around the country fail to recognize the benefits of hot water in the FOG laden waste stream and they forbid such sources of hot water as dishwashers from being a part of the FOG laden waste water system. PDI has done extensive testing on the affect of hot water on separation and can support through data the fact that hot water has little effect on separation efficiency. The Environmental Protection Agency, in their document EPA 625/1-80-012 **(Design Manual: Onsite Wastewater Treatment and Disposal Systems)** is specific in recommending the use of hot water and proximity to the source to enhance retention of FOG.

When discussing the location as a factor in installations, it should also be pointed out that in addition to proximity to the fixture, the interceptor should be located so that maintenance can be easily performed. Although this recommendation also seems so obvious as to not need discussion, some interceptors have been installed under sinks without clearance for removal of the cover. Some interceptors have been placed in the floor and tiled over; some have been located so that they are literally hidden from view; and some large outdoor interceptors have actually been paved over. The placement should allow the cover to be visible and easily removable for cleaning, and clearances should be such that the internal baffling can be serviced. With the cover removed, all wetted surfaces should be visible. This is necessary not only for access to clean the interceptor, but also to have the capability to easily inspect the interior for potential problems such as damaged baffles and blocked air relief bypasses.

The flow control fitting furnished with PDI certified interceptors must be installed in the waste line ahead of the interceptor. It should be located beyond the last connection from the fixture and as close as possible to the underside of the lowest fixture to minimize the effects of head pressure. When the wastes of two or more sinks or fixtures are combined to be served by one interceptor, a single flow control fitting may be used. Any flow control fitting installation not in conformance with these recommendations requires manufacturer consultation.

The air intake for the flow control may terminate under the sink drain board as high as possible above the flood level of the sink in order to prevent overflow. It may also terminate in a return bend at the same height outside the building. When the fixture is individually trapped and back vented, the air intake may intersect the vent stack. All installation recommendations are subject to the approval of the local plumbing code authority. *See Figure 8.*

One of the most controversial issues relating to Installation is: what fixtures or sources must be part of the FOG interceptor system? All drain-bourne FOG is a problem and if the problem is going to be solved all sources of FOG must pass through the grease interceptor. There is little controversy about connecting pot sinks. There is some controversy about connecting dishwashers. There are some questions relating to floor drains, but discharge from food grinders (or garbage disposals) is almost universally required to bypass the grease interceptor or to have the pulverized solids removed from the waste stream before it enters the interceptor.

The food grinder (and the associated pre-rinse station at the dishwasher) is one of the single greatest sources of FOG. Yet despite that fact, most codes forbid food grinder discharge from passing through a grease interceptor. ***Technologically there is no reason for the waste stream to bypass the grease interceptor if the solids have been removed.*** *See Figure 9.*

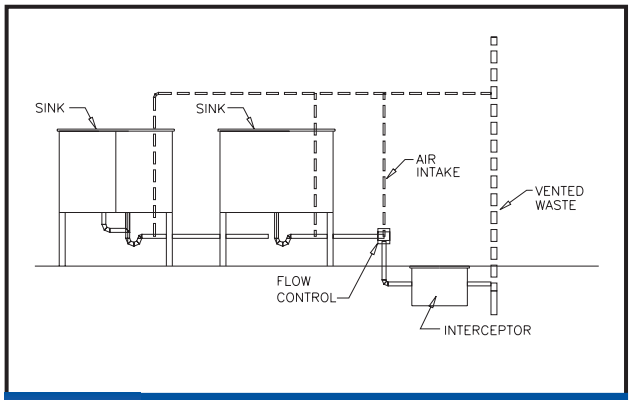

Figure 8: Grease interceptor serving two individually trapped and vented sinks - flow control air intake intersects vent

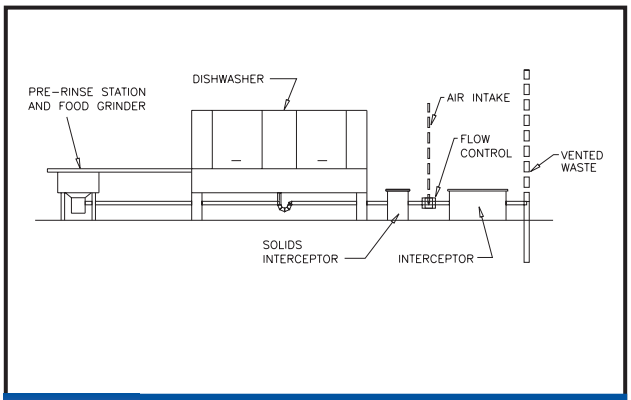

Figure 9: Grease interceptor with solids interceptor servicing dishwasher with pre-rinse station and food grinder - flow control air intake terminates above flood level

MAINTENANCE

Even the best designed interceptors, properly installed will fail if they are not maintained. The precise requirements for maintenance are not possible to define since conditions at each installation vary. In terms of the typical code, maintenance must be performed before the grease in the waste water down stream from the interceptor exceeds 100 parts per million (100 milligrams per liter) or whatever the local standard is.

While that is a simple statement to make, it is impossible for the user of a grease interceptor to determine when those limits have been exceeded. The method for determining when an interceptor's rated capacity has been reached is fairly simple if it is a PDI certified interceptor. A PDI certified interceptor has a rated retention capacity equal to twice its flow rate expressed in pounds. For example, a 35 GPM interceptor is rated to retain at least 70 lbs. of grease. A user may determine a cleaning schedule by measuring how much grease has been trapped over a period of time.

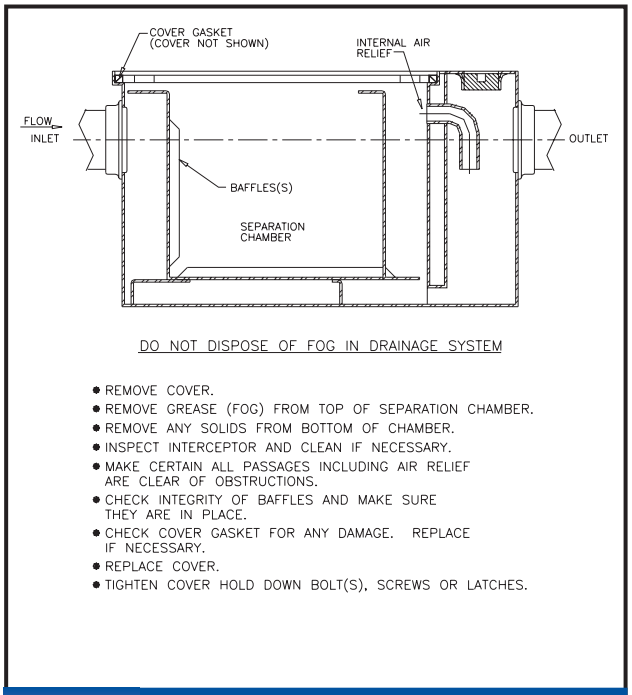

Figure 10: Grease interceptor cleaning and maintenance.

Grease will weigh about 7 pounds per gallon, and if it is determined that a 35 GPM interceptor accumulates about 5 gallons of grease every 4 days it would be easily and correctly assumed that the interceptor must be cleaned no less than once a week. In fact, if the user must comply with a code which limits grease to 100 parts per million, cleaning would be recommended every 2 or 3 days. When cleaning is discussed, it should be understood that cleaning an interceptor should always include the removal of grease from the top of the separation chamber as well as any solids which have accumulated along the bottom. *See Figure 10.*

The actual frequency of cleaning a certified interceptor will vary depending upon a wide variety of factors; the type of food served will determine how much grease will enter the interceptor. An interceptor used for cleaning utensils or limited to serving trays in a restaurant where no food is actually prepared is going to accumulate a lot less grease than one used in a full service restaurant where all of the food preparation equipment and utensils as well as dishes are washed. Another factor affecting the cleaning cycle will be whether a food grinder is discharged into the interceptor, and whether the food specialty is high in FOG.

The allowable grease content in the waste

water will also determine the frequency of cleaning. It should be noted that all PDI certified interceptors will separate efficiently enough to meet any grease limits (which may range from 50 parts per million up to as much as 600 parts per million depending upon the jurisdiction). They may require cleaning when as little as 25% of their rated capacity has been reached depending upon the limits established by the administrative authority. This statement is based on an analysis by PDI of accumulated test data. That data was collected at full rated flows, and does vary from product to product.

The cleaning cycle on large capacity interceptors is less easily determined. Anecdotal evidence gathered from a variety of sources and communities indicates that their size is often interpreted as meaning less frequent cleaning is required, and to a degree this may be true. From information gathered from a variety of sources however, the consensus appears to indicate the cleaning frequency for large interceptors is in the range of 2 to 4 weeks. This amount of time is the maximum allowable for large interceptors to still meet the discharge limits on FOG. Due to the nature of the large interceptors, the user is not likely to be the cleaner, and in some cases may actually be prohibited from cleaning the interceptor. Usually cleaning will be done by a renderer, a septic tank service, or a company which specializes in grease interceptor cleaning. The annual cost of regular cleaning is likely to average between $2,800 and $4,000 depending again upon the discharge limits and the local market costs. (January, 1998 average cost)

Regardless of what the cleaning cycle is determined to be, it has been shown by actual field experience that one of the biggest obstacles to regular maintenance has been the odors usually associated with interceptors. The easiest way to eliminate that problem is frequent cleaning. If cleaning the grease interceptor becomes a part of the daily routine it usually will only require about 15 minutes and there will be limited or no objectionable odors.

It has been determined that when food grinders are part of the waste system, and a properly sized solids interceptor, cleaned daily, is located ahead of the grease interceptor, the odors normally associated with the grease interceptor are not present because the food particles which decay and cause odors never reach the interceptor.

Use of the solids interceptor improves the grease quality to extent that the recovered grease may be disposed of with the golden fryer grease which is usually purchased by the local renderer. Now instead of paying for disposal, the restaurant may be compensated for the grease, since it can be recycled into a variety of products.

When regular maintenance is not performed the obvious result is a grease interceptor which becomes unable to separate the FOG due to overloading, thus passing these materials downstream. ***Unless it is equipped with an electronic, sensor controlled, positive inlet closure valve to prevent such overloading, no grease interceptor will otherwise automatically shut itself down to prevent overload discharge.*** Apart from violating codes or ruining the on-site wastewater treatment system, sewer blockages and the associated health risks are likely. Some FOG generators would rather do almost anything but clean a grease interceptor. FOG generators have several options, some of which are acceptable alternatives, and some of which are possibly legal, but nevertheless unacceptable.

One alternative is to engage the services of a company which specializes in cleaning

interceptors. This is not an inexpensive approach, and in the case of large interceptors is required. If the service is performed as often as necessary, it insures the interceptor will function as intended.

Another alternative is the use of an interceptor that is considered to be a Grease Recovery Device (or Grease Removal Device). A GRD is a separator which has as an integral part of its design a means by which grease is removed.

A GRD will be one of two basic types:

1. Timer controlled - *See Figure 11.*

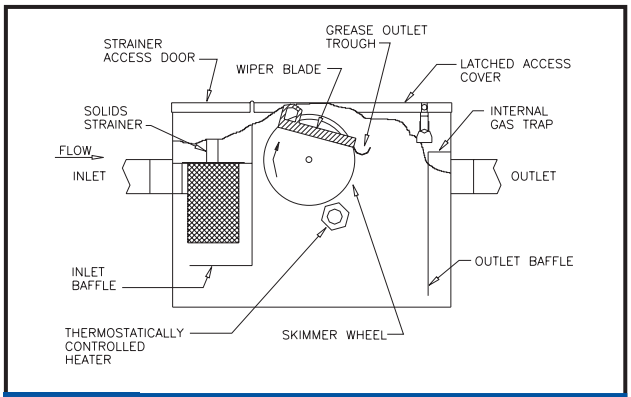

Figure 11: A timer controlled Grease Recovery Device (GRD)

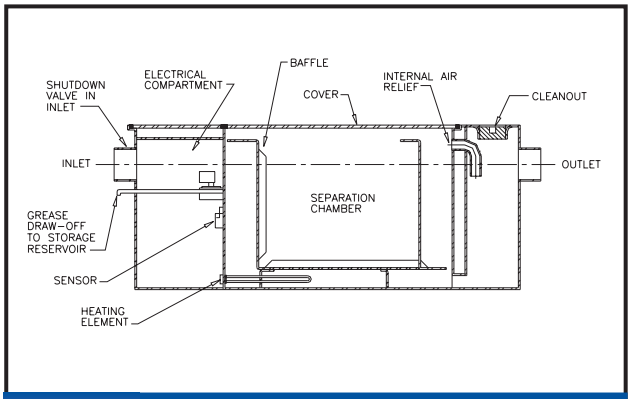

Figure 12: Sensor controlled Grease Recovery Device (GRD)

2. Sensor controlled - *See Figure 12.*

Timer controlled devices typically utilize a disk or belt which passes through the FOG layer and a squeegee device to wipe the accumulated FOG from the disk or belt into a drain trough and into a FOG receptacle. Other means of removing the FOG include a pump or gravity flow activated by the timer. They are usually regulated by a 24 hour timer which is set upon installation. The timer will operate the FOG removal system for a set time or times each day.

Sensor controlled devices have the ability to sense the presence of FOG. By detecting FOG and initiating the removal process only when necessary and as often as necessary, the GRD can always keep the retained FOG below the rated capacity of the device. The sensor operated devices use valving and gravity or pump assisted FOG removal.

A GRD standard, A112.14.4 is currently nearing completion, and as FOG problems continue to be a factor, most jurisdictions will not only allow the use of a GRD, but in some cases a GRD will be mandated. It must be noted that while a GRD eliminates the daily routine of grease interceptor cleaning, these devices do require periodic maintenance to remove trapped solid debris, removal of scum and a check of system operation.

The previous two examples of methods to avoid routine maintenance are certainly good and acceptable choices. ***Some others are not and are to be avoided in conventional grease interceptors.*** The first is the use of chemicals, often touted as environmentally friendly enzymes or emulsifiers. These materials may even have names which imply their use is environmentally acceptable. The second is the use of "bacteria" or organisms designed to digest wastes.

In the first category, the materials used work by changing the structure of FOG from a hydrophobic material that is unlikely to mix freely with water (thus allowing separation to easily occur) to a hydrophilic micelle which mixes freely with water thus inhibiting or preventing separation from occurring in the interceptor. The use of these additives only changes the structure of the FOG for a limited period of time, and eventually the FOG will revert back to its original form, usually downstream in the public waste water collection system. While this practice, in conventional interceptors, works to pass the problems on to somebody else, the methods jurisdictions use today to detect FOG content in the effluent are sophisticated enough to accurately identify any violator of the sewer codes.

The second method, the use of bacteria (or bio-remediation as it is called) works. The concept of bio-remediation is sound: trap greases and digest them in the interceptor to convert the grease permanently into the by-products of digestion. This is exactly what happens in a sophisticated waste water treatment plant. *See Figure 13.* Bio-remediation does not eliminate the need for monitoring the effluent quality, routine maintenance to deal with undigested materials, or inspections to insure all components are clean and functioning properly.

New York City has done an extensive amount of testing using microorganisms for remediation of sewer blockages. Their testing shows that the process has merit and they use bio-remediation in concert with mechanical sewer cleaning to take care of sewer blockages.

For an additive to have any positive effect, it must be known to produce net reduction in weight and volume of the FOG either through biochemical or catalytic processes. Such disposal methods require engineered devices (PDI certified FOG Disposal Systems) and professional administration.

When dealing with a conventional grease interceptor, the most practical and economic maintenance practice is to regularly remove the FOG and dispose of it in accordance with applicable solid and special waste disposal regulations.

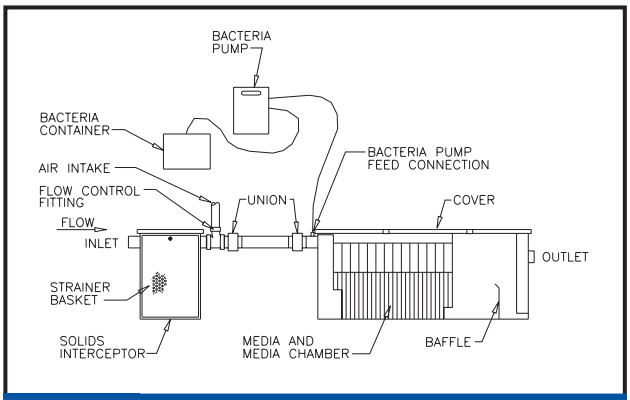

Figure 13: Bio-remediation Grease Interceptor

SUMMARY

The problems relating to fats, oils and greases (FOG) are easily addressed, to do so requires an understanding of the principles of separation and a willingness to do all that is necessary. Dealing with FOG problems is not limited to restaurant owners; it is an issue a number of parties must share in resolving. Codes must be written or, more precisely, rewritten to be technically correct. Administrative Authorities must make certain when they write and/or endorse codes that all of the issues have been correctly addressed.

Interceptors and FOG disposal systems which have been properly designed and certified must be required and used. They must be installed as they were tested and were intended to be installed. And last, but not least, the devices must be maintained according to the codes and the manufacturer's requirements.

REMEMBER: Proper maintenance of even the poorest interceptor will provide better results than the lack of maintenance on the best interceptor.